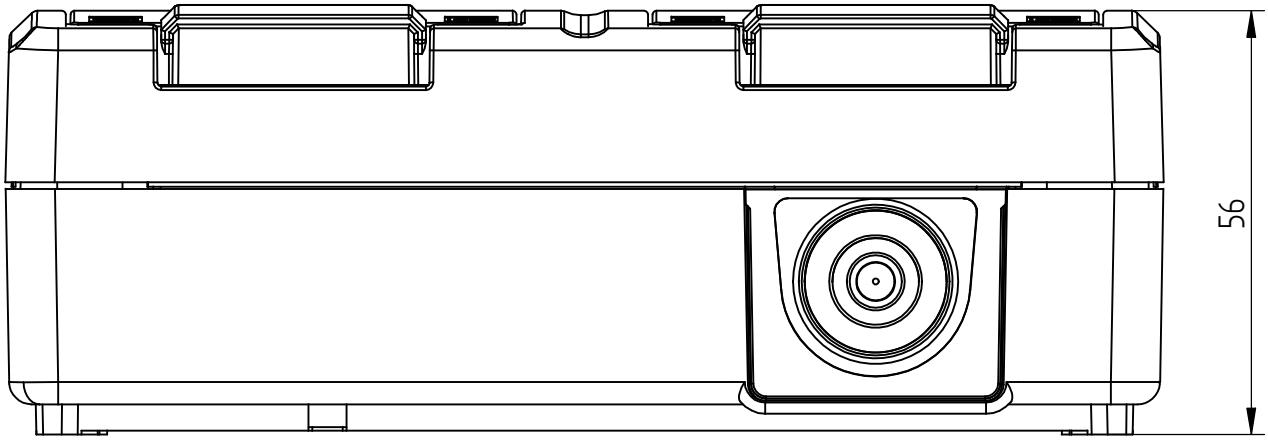

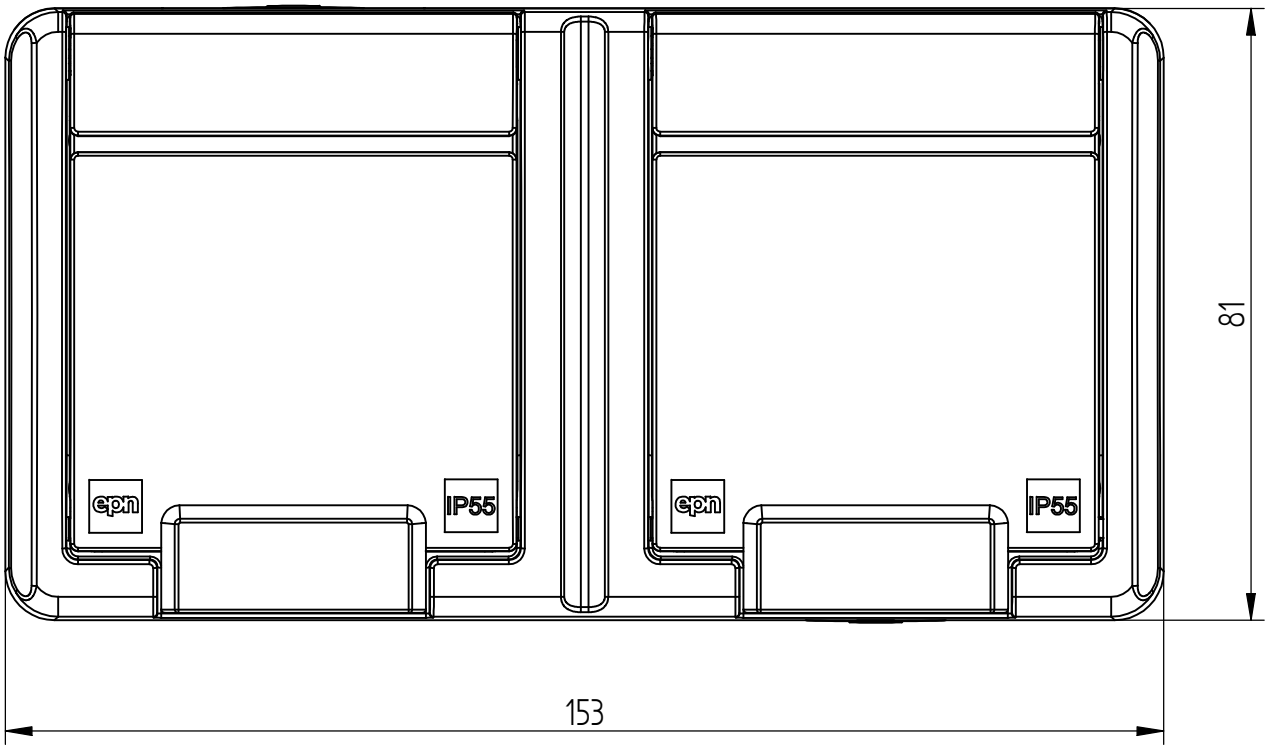

5042-1X ark. 1 / 2

Created by K on 16.05.2012

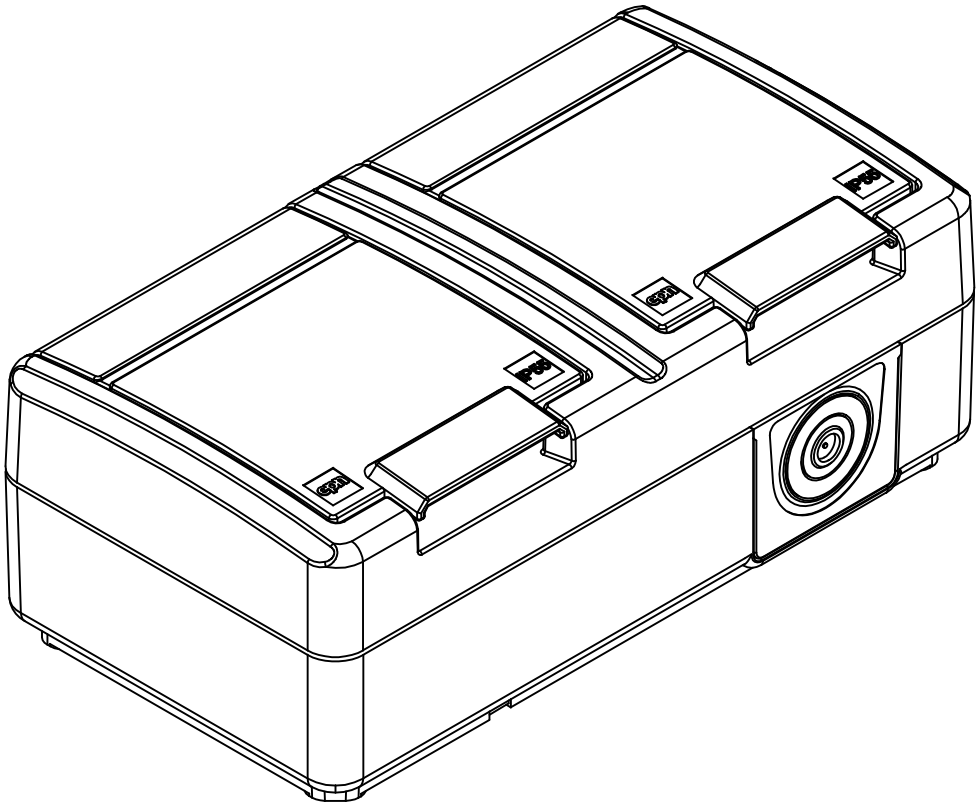

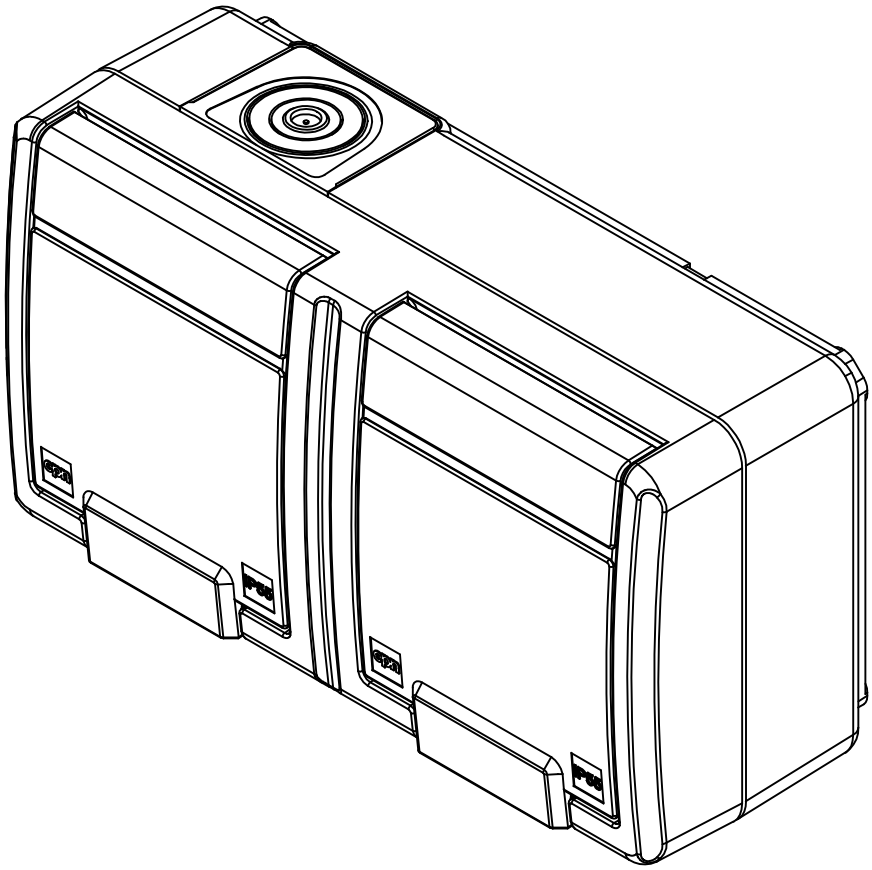

5042-1X ark. 2 / 2

Created by K on 16.05.2012